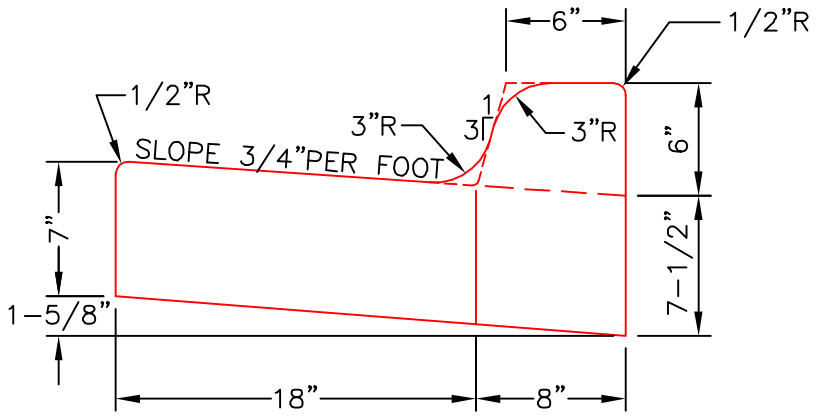

STANDARD CURB & GUTTER
(B618 CURB & GUTTER)

NOTE: B618 CURB AND GUTTER TO BE INSTALLED ON ALL RADII AND A 5' TRANSITION ON CATCH BASINS WHERE D412 CONCRETE CURB AND GUTTER IS SPECIFIED.

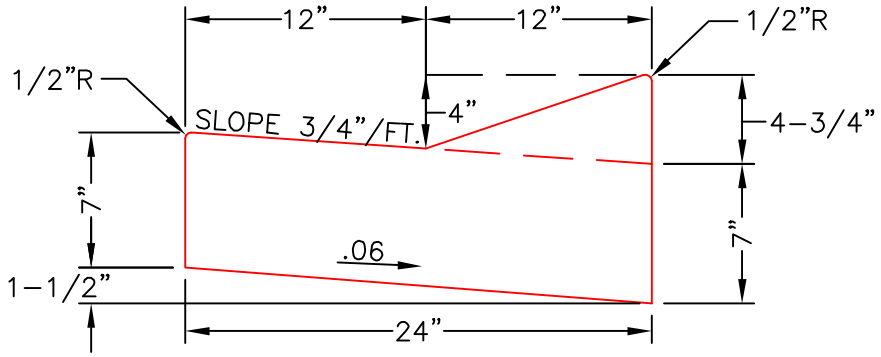

STANDARD SURMOUNTABLE
(D412 CURB & GUTTER)

Lakeville	STREET STANDARD CURB DETAILS	PLATE NO. LV–ST–2 DATE 5/5/14